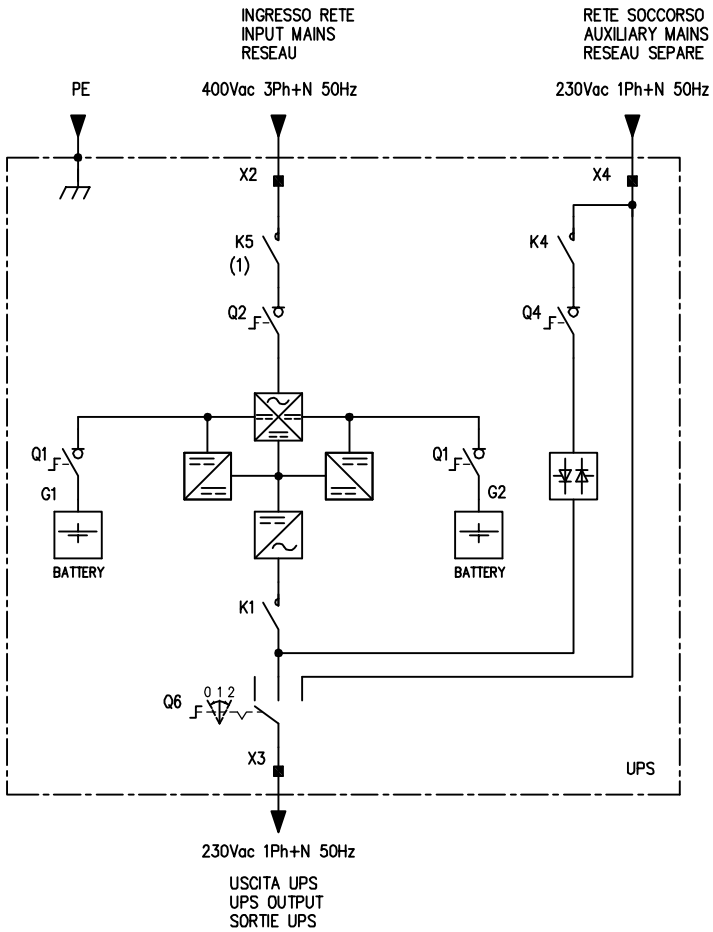

(1) BACKFEED PROTECTION (FITTED,ON REQUEST, BY THE FACTORY)

Data DATE	REV. REV.	Elaborato ISSUED BY	Modifiche MODIFICATIONS	VERIFICATO CHECKED BY	APPROVATO APPROVED BY	RELEASE
10/07/2008	A	G. GENNARI	FIRST EMISSION	A.TAMIOZZO	A.TAMIOZZO	R00

MASTERYS MC 10-20kVA 3/1

CONNESSIONI DI PRINCIPIO
PRINCIPLE OF CONNECTION
PRINCIPE DE RACCORDEMENT

socomec Innovative Power Solutions UPS

3 | DIS. DRGMASMCTM11S101000_A SEL FOGLIO: 001 | A

Property of Socomec UPS. All rights reserved. No parts of this document may be used without the written permission of Socomec UPS. Socomec UPS reserves the right to add, modify or delete any information of this document at any time and without notice